Check valve AT 1159A

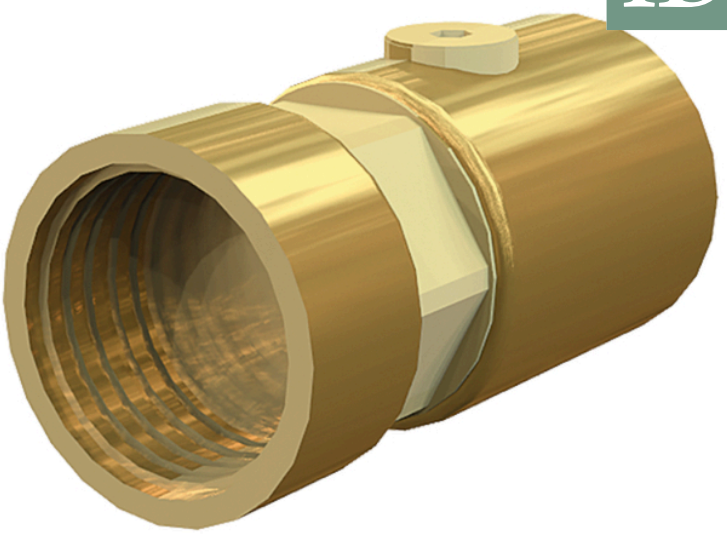

Product information

Controlled backflow preventer with internal threads type EA in lead-free brass for liquid category 1-2 according to SS-EN 1717.

Dimension range (DN)	15 - 50
PN	10
Temperature (°C)	0 - 90
Main material	Brass

Area of use

To protect the drinking water system internally and externally from backflow and overpressure backflow, a protective cover is required for liquid categories 1-2. The backflow prevention device is of type EA in accordance with SS-EN 1717.

Tender text

PSE.31 Check valves in liquid systems
Check valve, controllable, made of lead-free brass CW724R ECOBRASS.
AT 1159Axx internal thread
AT 1159AxxM complete protective module including ball valve with internal thread.

Quality assurance

Accepted material, 4MSI Common Approach - Part B – 23rd Revision, 5th December 2025, AFS 2023:5, 8 paragraf, Fluid category 2, SS-EN 1717
Product marking: Brand, material, dimension, and arrow indicating flow direction.

Energy and environment declaration

Product Bvb: Accepted
Product BVB ID: 115332
Subject to notification under REACH: No
Reach date: 12/06/2026

Pos	Component	Material

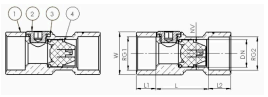

Measurements and weight

Dimension range (DN): 15 - 50

DN	15	20	25	32	40	50
A	70	70	80	90	103	120
B	26	31.5	39.5	49.5	54.4	68
Net weight (kg)	0.182	0.211	0.376	0.612	0.827	1.262

Function and design

The valve has a spring-loaded cone, which allows it to be installed in any built-in position, and it closes before the media flow reverses. In order for the check valve AT 1159A to meet the requirement according to SS-EN1717 as a protection module type EA, a shut-off valve must always be installed just before the check valve. This is necessary to enable control to be carried out.

Use the complete module AT 1159AXXM to meet the requirement as a complete protection module. The check valve belongs to type EA and provides protection coverage for liquid up to category 2. The valve has an outlet upstream, which is equipped with a plug. The outlet is used to check the function and tightness of the check valve.

Technical data

Main material: Brass
Main material code: Brass (CuZn21Si3P) (CW724R)
Included materials: Brass, Stainless steel, Plastic, Other
Included material code: Acid resistant stainless steel AISI 316 (1.4401), Brass (CuZn21Si3P) (CW724R), Brass (CuZn35Pb1,5AlAs) (CW625N), PTFE (polytetrafluoroethylene)
Material note: Lead-free brass CW724R ECOBRASS
Temperature (°C): 0 - 90
PN: 10
Connection: Internal thread ISO 228-1 (G, BSPP)
ETIM classification: EC011469 - Check valve
BK04 code: 20711 Non-return valves

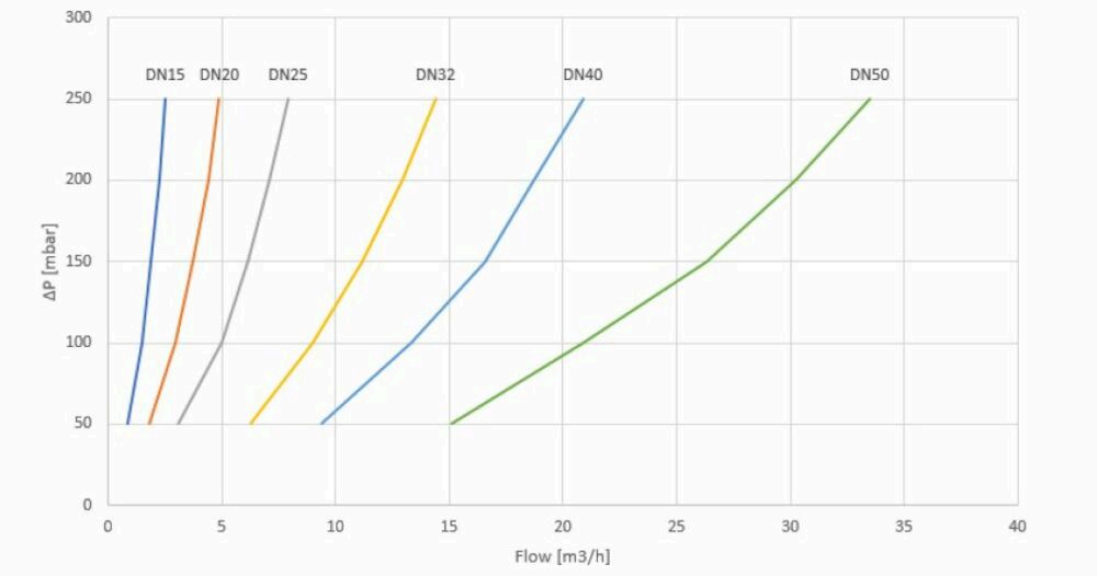

Installation and maintenance

Flowdirection: Uni-directional
Possible mounting position: Vertical, Horizontal
In case of a need for larger dimensions, the Controllable Check Valve AT 1159AXXF is selected. The check valves are designed with flanges DN 65-250. To meet the requirement according to SS-EN1717 as a protection module type EA, a shut-off valve must always be installed just before the check valve. In the design as a complete protection module, all components included are made of lead-free brass, AT 1159AXX, AT 3701-XX, AT 5461RXXBF.

The company's management system
is certified by DNV
ISO 9001 • ISO 14001

Get into the flow

Get into the flow with Armatec.

armatec

info@armatec.se | +46 31 89 01 00 | www.armatec.se