Rubber Expansion Joint AT 5983

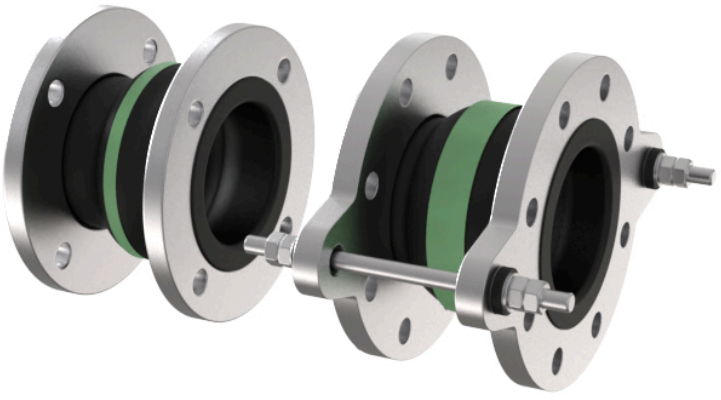

Product information

AT 5983 is a high-quality rubber compensator that can be used with chemicals, aggressive chemical water, and compressor air containing oil. The unique shape and quality of the rubber bellows provide optimal flexibility in all directions and absorb pipe displacements in most piping systems. With a flanged EN1092 connection, it is easy to install, and it also has outstanding sound and vibration damping properties, making it an excellent choice for many industrial applications.

Dimension range (DN)	32 - 400
PN	16
Temperature (°C)	-20 - 110
Main material	Rubber

Area of use

Rubber compensator with unique sound and vibration damping properties. The rubber bellows has a shape and rubber quality that allows for optimal flexibility in all directions. AT 5983 can be used to absorb pipe displacements in most fluid and gas pipe systems. AT 5983 is used for chemicals, aggressive chemical water, and compressor air containing oil.

Tender text

PSH.21 Vibration dampers and the like in fluid power systems

Quality assurance

AFS 2023:5, PED 2014/68/EU
Product marking: Manufacturing date and colour indication.

Energy and environment declaration

Subject to notification under REACH: No
Reach date: 12/06/2026

Measurements and weight

Dimension range (DN): 32 - 400

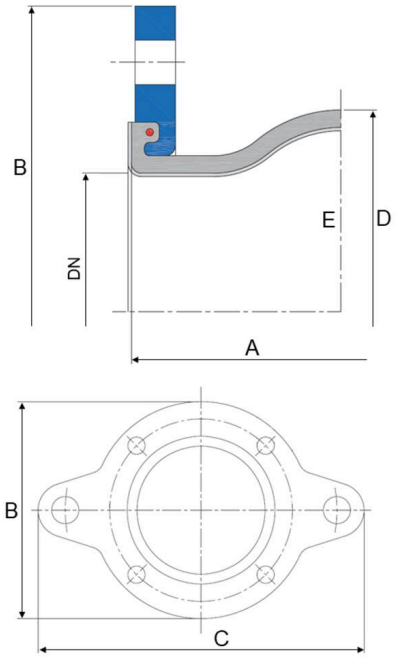

DN	A	B	C*	D	Effektivarea (mm²)
32	130	140	230	81	1700
40	130	150	240	86	1800
50	130	165	255	96	3200
65	130	185	275	111	5300
80	130	200	290	122	8500
100	130	220	310	142	12800
125	130	250	340	168	18700
150	130	285	375	192	25900
200	130	340	440	252	41000
250	130	395	509	302	59600
300	130	445	559	354	82200
350	200	505	619	420	117600
400	200	565	700	480	154700

Function and design

The compensator bellows cover the outlet on the flange, so that additional sealing is not necessary.

Technical data

Main material: Rubber
Main material code: CSM (chlorosulphonated polyethylene)
Included materials: Steel, Rubber
Included material code: CSM (chlorosulphonated polyethylene), Steel S235JR (Rst 37.2) (1.0038)
Material note: CSM with polyamide reinforcement
Temperature (°C): -20 - 110
Temperature notes: Maximum operating temperature: 100°C
Short-term maximum operating temperature: 110°C
See maximum allowable operating data in the user manual.
PN: 16
Connection: Flanged EN1092
Comment to colour: Green markings

Installation and maintenance

Flowdirection: Bi-directional
Possible mounting position: Vertical, Horizontal
Rubber compensator AT5983 is delivered ready for installation. The standard flanges can be rotated to any desired position. Separate seals are not required. Before mounting the compensator, make sure that the sealing surface of the mating flange is free from damage. Protruding pipe ends, grooves, wedges, weld spatter, etc. should not be present, as these can damage the sealing surface of the coupling.

Be careful to maintain the correct gap between the pipe ends. Forcing the pipes together in too large a gap can stretch the rubber bellows and cause the sealing lips to inadvertently creep out of their groove. During installation, the maximum allowable stretching is +5 mm and the maximum allowable compression is +5 mm. Excessive stretching limits the allowable range of motion.

Refer to the separate user manual for further instructions.

The company's management system
is certified by DNV
ISO 9001 • ISO 14001

Get into the flow

Get into the flow with Armatec.

armatec

info@armatec.se | +46 31 89 01 00 | www.armatec.se