Vsak prenos tretjim osebam in uporaba v nedogovorjene namene ni dovoljen.
This document must not be copied without our written permission and/or transferred to a third party for any unauthorized purpose.

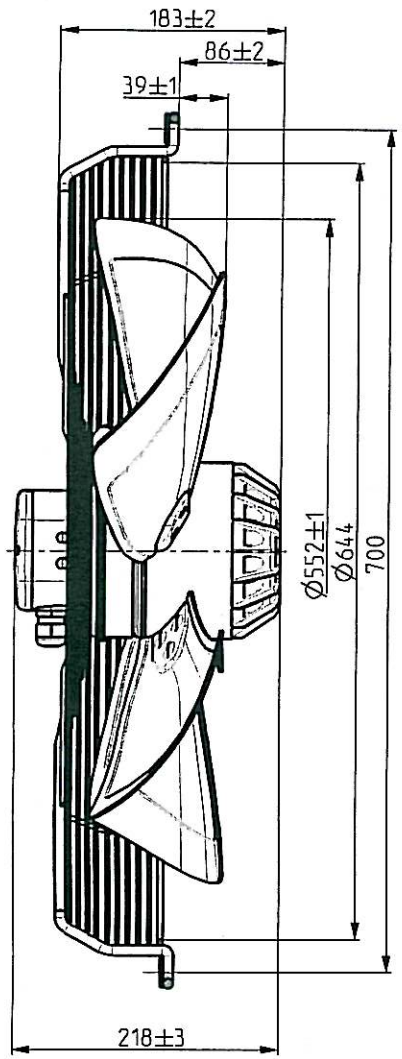


SUCKING
AIRFLOW DIRECTION
SMER ZRAKA

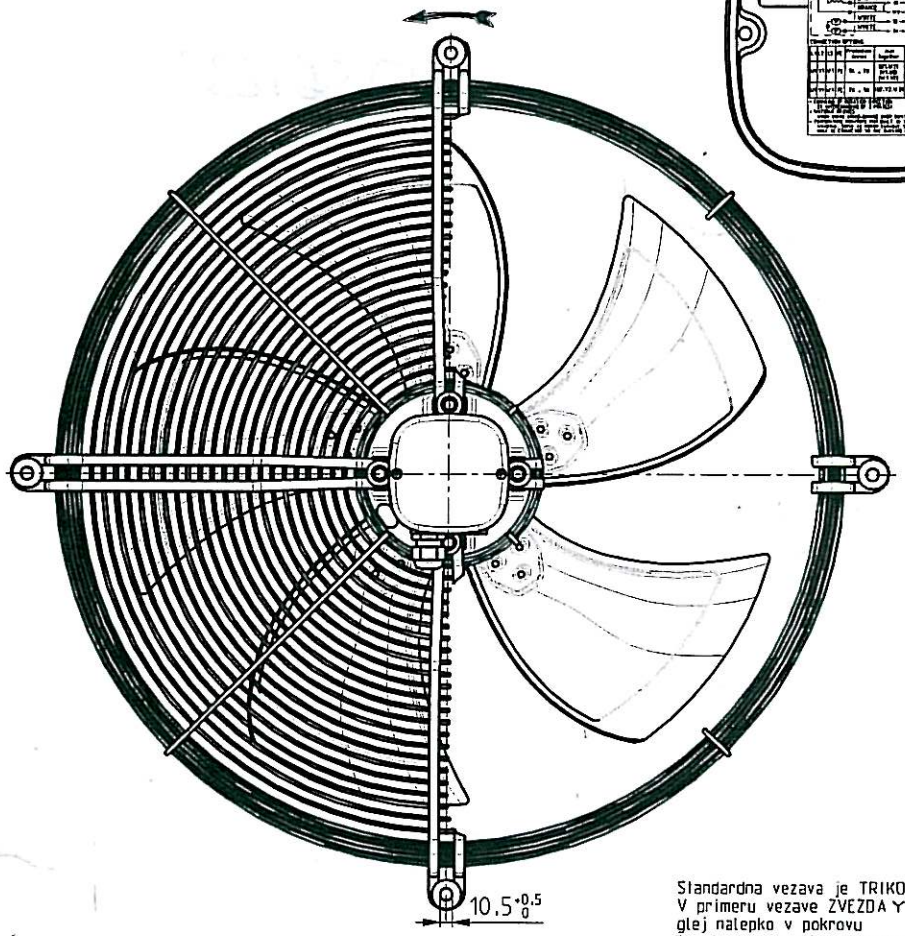


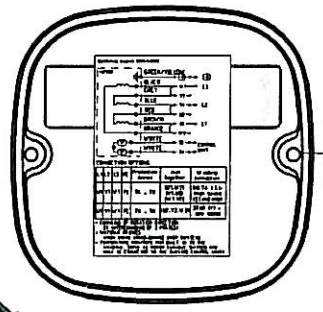

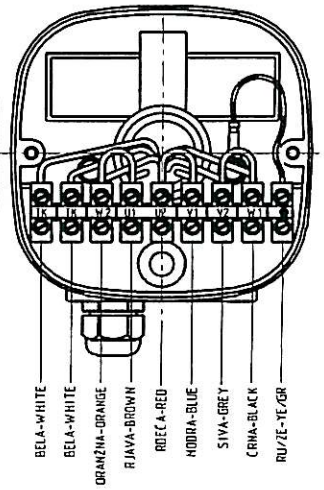


Connecting diagram 0301-1-0033

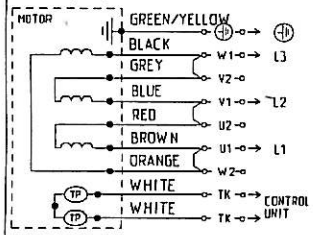


CONNECTION OPTIONS:

| L1 | L2 | L3 | PE | Protection device | Join together | Winding connection |
|---|---|---|---|---|---|---|
| U1 | V1 | W1 | PE | TK , TK | (U1.W2) (V1.U2) (W1.V2) | DELTA (Δ)- high speed (STANDARD) |
| U1 | V1 | W1 | PE | TK , TK | (U2.V2.W2) | STAR (Y) - low speed |

- CHANGING OF ROTATION DIRECTION BY INTERCHANGING OF 2 PHASES!
- WITHOUT BRIDGES WHEN USING SPEED-CHANGE OVER SWITCH!
- TEMPERATURE MONITORS (TK) BUILT IN TO THE WINDING, SERVE AS MOTOR CUT-OUT SWITCH AND MUST BE CONNECTED TO THE OUTSIDE CONTROL UNIT!

Standardna vezava je TRIKOT △
V primeru vezave ZVEZDA Y
glej nalepko v pokrovu
Standard connection scheme is DELTA △
If required STAR Y see the
connection diagram in the cover

Opomba:
Vzmetna ploščica na kabelski strani.
- navodilo za kontrolo ventilatorja 0301-1-4397
- checking instruction 0301-1-4397

HOFA MADE IN SLOVENIA CE DATE
R13R-5630HA-6T2-7008
3~400V D/Y 50Hz 380/250W 0.85/0.44A
910/760RPM IP54 INS.CL.F TH.PROT.
ROT. 0313-4-1058

| ST. | ST.SPR. | DATUM |
|---|---|---|
| 1 | 188/07 | 01-Jun-2. |

ROTOMAT'

NORDICOLD

| DATUM | PODPIS |
|---|---|
| 1-Jun-2006 | Uros K. |
| -Jun-2006 | Matej B. |

NETOLERIRANE MERE / UNCHANGED DIM. ISO 2768-m

MERILO/FORMAT 1:4 / A3

MATERIAL

NAZIV: TITLE: VENTILATOR Hef R13R-5630HA-6T2-7008

KODA: CODE: 0313-4-1058

VERZIJA: REV:

LIST: SHEET 1 OD: OF 1